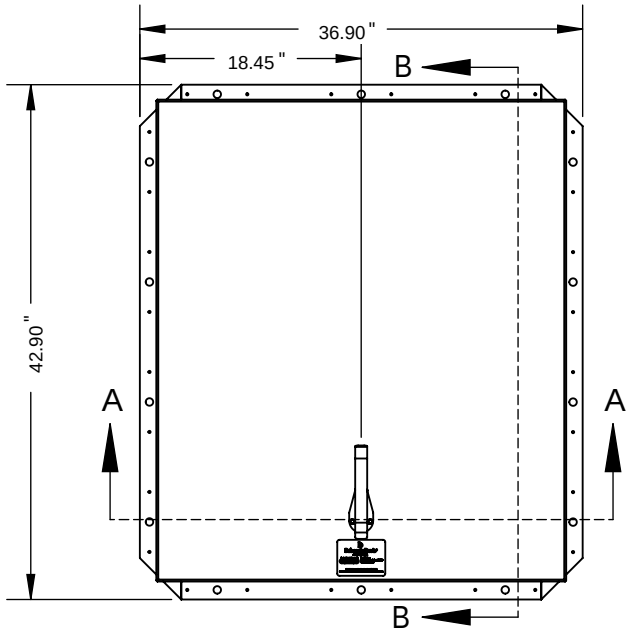

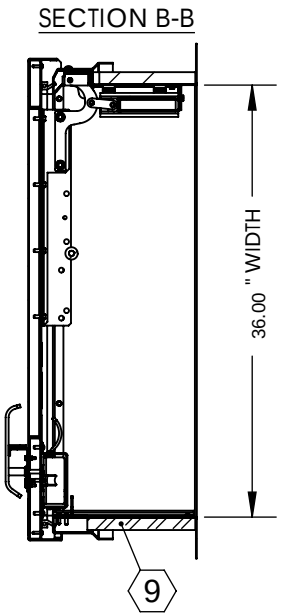

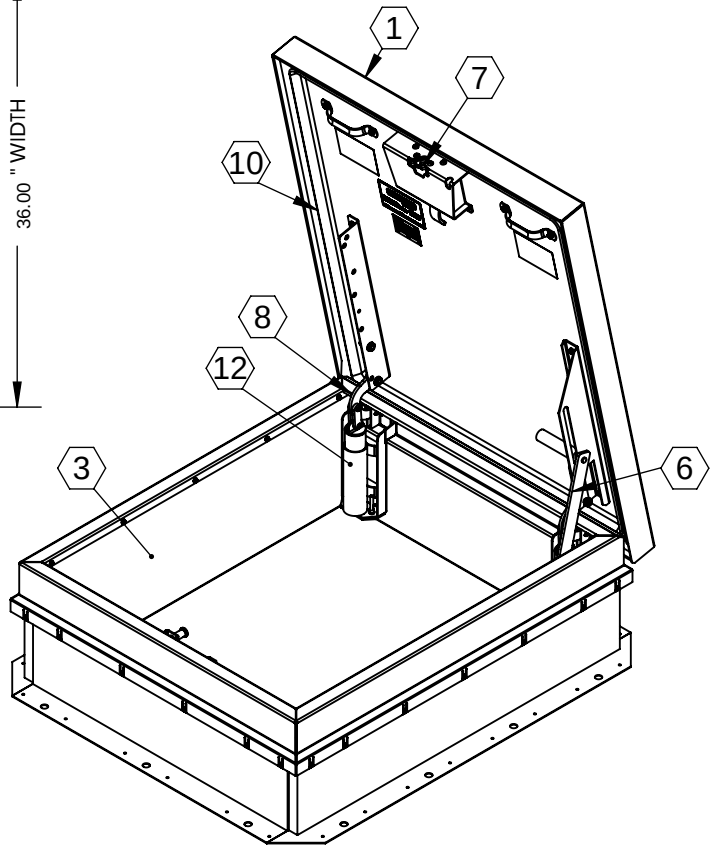

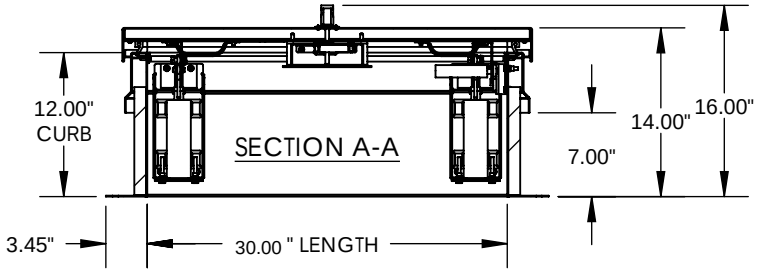

SPECIFICATIONS:

1. **COVER:** 14 GAUGE GALVANEALED COVER STIFFENED TO WITHSTAND A LIVE LOAD OF 40 PSF WITH A MAX DEFLECTION OF 1/150 OF THE SPAN.
2. **LINER:** 22 GAUGE GALVANEALED
3. **CURB AND COUNTERFLASH W/ EZ TAB:** 14 GAUGE GALVANEALED
4. **FINISH: COVER - RED OXIDE POWDER**
   CURB - RED OXIDE POWDER
5. **HARDWARE:** ZINC PLATED STEEL
6. **HOLD OPEN ARM:** LOCK COVER IN FULLY OPEN POSITION - ZINC PLATED STEEL
7. **LATCH**: SINGE POINT ZINC PLATED ROTARY LATCH ASSEMBLY DESIGNED TO HOLD COVER CLOSED AGAINST +/- 100 PSF WIND UPLIFT, ZINC PLATED STEEL LATCH STRIKER ON CURB.
8. **HINGES:** ZINC PLATED STEEL TAMPER PROOF WITH STEEL HINGE PINS CONTAINED WITHIN HATCH AS PART OF SPRING ASSEMBLY.
9. **INSULATION**:1" POLYISO (R7.2) CURB, 1" POLYSTYRENE COVER
10. **GASKET:** ADHESIVE BACKED EPDM RUBBER EXTRUSION
11. **MANUAL OPENING:** COVER OPENS WITH INTERNAL AND EXTERNAL MANUAL ROTARY LATCH HANDLE WITH INTERNAL AND EXTERNAL PADLOCK SECURITY PROVISION.
12. **SPRING ASSEMBLY:** GREASED HEAVY DUTY STEEL COMPRESSION

ROOF HATCH SIZE: 36.00"(WIDTH) x 30.00"(LENGTH)

ROUGH OPENING: 36.00"(WIDTH) x 30.00"(LENGTH)

TEST CERTIFICATIONS:

TAS201 IMPACT TEST
TAS202 UNIFORM STATIC AIR PRESSURE Ñ 100 PSF
TAS203 CYCLE WIND PRESSURE LOAD

THE DESIGN CONTAINED HEREIN IS DESIGNED AND TESTED IN ACCORDANCE WITH THE FLORIDA BUILDING CODE.

FLORDIA PRODUCT APPROVAL NO:	FL15803
MIAMI-DADE COUNTY APPROVED	*MIAMI DADE COUNTY, FL* *NOA# 12-0320.29* *EXPIRATION DATE: 7/19/17*
PROJECT:	
ARCHITECT:	
CONTRACTOR:	
QTY:	
PART#:	BRHZG36X30S1T
babcockdavis 9300 73rd Avenue North Brooklyn Park, MN 55428	TITLE: Roof Hatch, Hurricane Hatch, ,Sngl Dr, Steel, Red Oxide Pwd,Sngl Wall Curb

	NAME	DATE	SIZE	DWG. NO.	REV
DRAWN	SGS	1/16/12	A	BRHZG36X30S1T	A
RELEASED	IMT	1/18/12	WEIGHT:		SHEET 1 OF 2

PROPRIETARY AND CONFIDENTIAL: THE INFORMATION CONTAINED IN THIS DRAWING IS THE SOLE PROPERTY OF BABCOCK-DAVIS. ANY REPRODUCTION IN PART OR AS A WHOLE WITHOUT THE WRITTEN PERMISSION OF BABCOCK-DAVIS IS PROHIBITED.

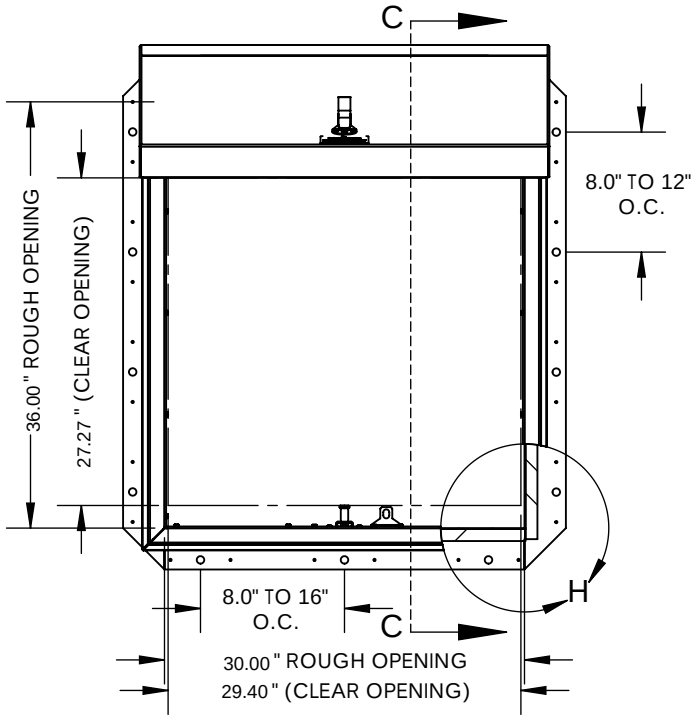

DETAIL H
SCALE 1 : 6

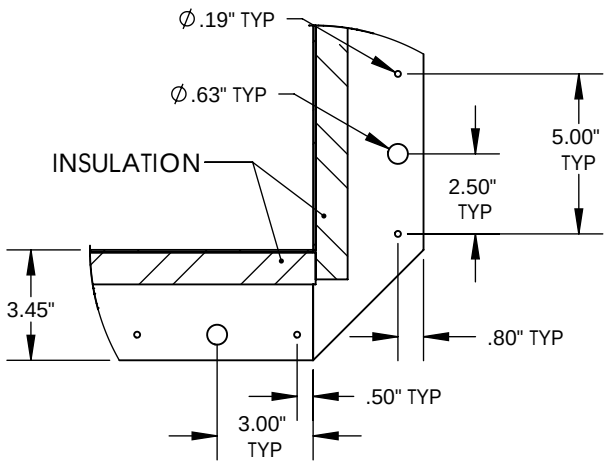

ANCHORING OPTIONS

USE THE FASTENER MANUFACTURES RECOMMENDED SAFETY FACTORS. IF DIFFERENT CONDITIONS EXIST, CONTACT MANUFACTURE OR A FLORIDA PROFESSIONAL LICENSED ENGINEER FOR CONSULTATION.

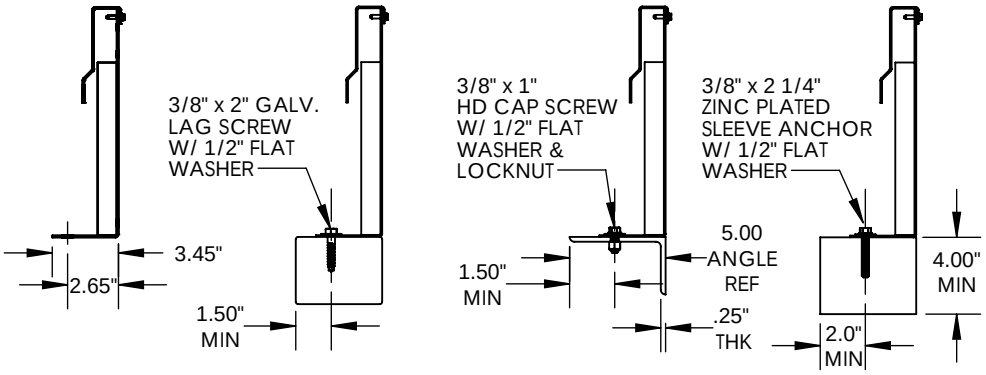

CURB DETAIL | *WOOD CURB WOOD S.G.=.55* | *STEEL CURB* | *CONCRETE CURB 3000PSI MIN*

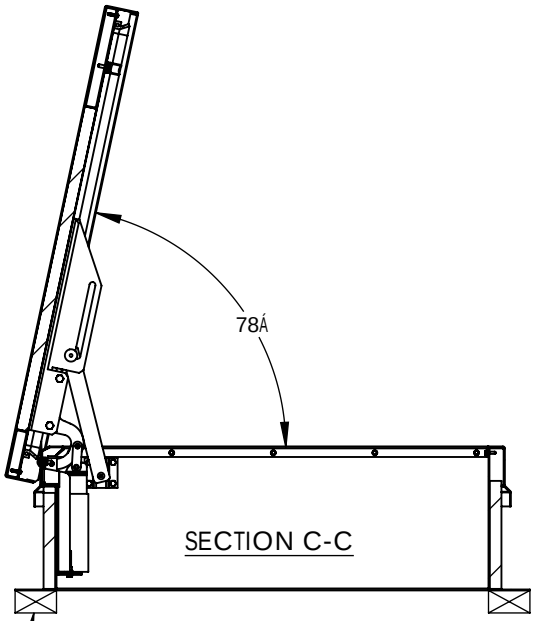

SECTION C-C

MOUNTING BY OTHERS
FOLLOW ANCHORING
OPTIONS RECOMMENDATIONS

PROPRIETARY AND CONFIDENTIAL: THE INFORMATION CONTAINED IN THIS DRAWING IS THE SOLE PROPERTY OF BABCOCK-DAVIS. ANY REPRODUCTION IN PART OR AS A WHOLE WITHOUT THE WRITTEN PERMISSION OF BABCOCK-DAVIS IS PROHIBITED.

babcockdavis
9300 73rd Avenue North
Brooklyn Park, MN 55428

TITLE:
Roof Hatch, Hurricane Hatch,
,Sngl Dr,
Steel, Red Oxide Pwd, Single Wall Curb

	NAME	DATE	SIZE	DWG. NO.	REV
DRAWN	SGS	1/16/12	A	BRHZG36X30S1T	A
RELEASED	IMT	1/18/12	WEIGHT:		SHEET 2 OF 2