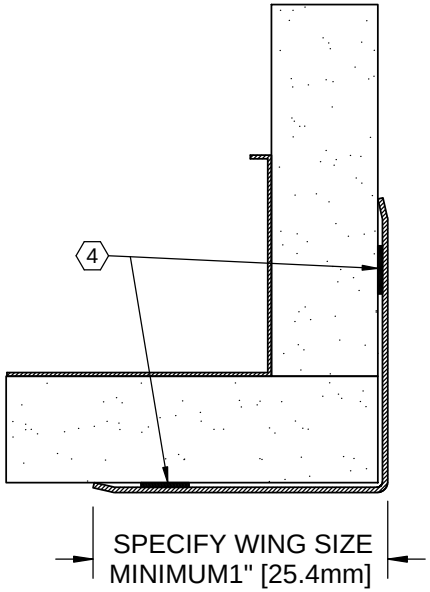

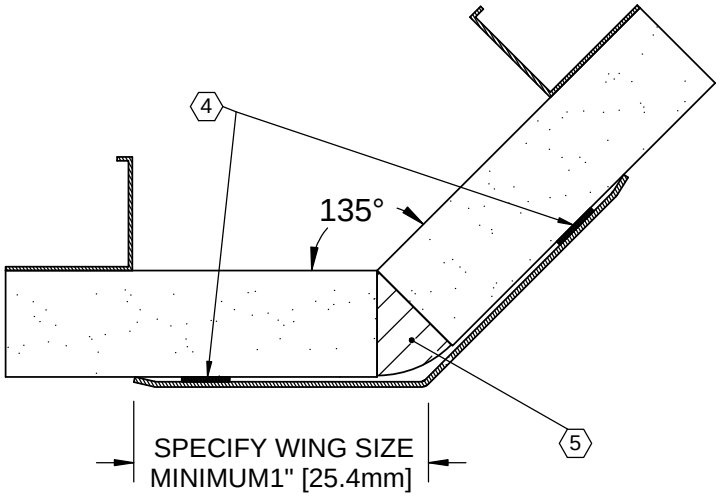

BCGSS, TYPE 304 STAINLESS STEEL

BCGTS, TYPE 430 STAINLESS STEEL

WING SIZE	HEIGHT	QTY	ANGLE

NOTES:

1. ADHESIVE APPLICATION (STANDARD)
2. MATERIAL: TYPE 304 (BCGSS) OR TYPE 430 (BCGTS) STAINLESS STEEL, 16 GAUGE WITH ROUNDED EDGES.
3. FINISH: SATIN #4 WITH REMOVABLE PROTECTIVE COATING.

(4) USE 1/4" [6.4MM] CONTINUOUS BEAD OF MASTIC ADHESIVE EACH FLANGE. SEAT FIRMLY ON FLOOR TO AVOID SLIPPAGE DURING SETUP.

(5) QUICK SETTING JOINT COMPOUND BY OTHERS.

6. AVAILABLE IN 90° AND 135° (STANDARD). CUSTOM ANGLES AVAILABLE, MINIMUM 22°.
7. CONTINUOUS LENGTHS AVAILABLE 10' MAXIMUM.
8. EMBOSSED PATTERNS AVAILABLE IN 304 STAINLESS STEEL ONLY. GAUGE AND LENGTH MAY VARY DEPENDING ON PATTERN.
9. FASTENERS AND PARTITION COMPONENTS BY OTHERS.

PROPRIETARY AND CONFIDENTIAL: THE INFORMATION CONTAINED IN THIS DRAWING IS THE SOLE PROPERTY OF BABCOCK-DAVIS. ANY REPRODUCTION IN PART OR AS A WHOLE WITHOUT THE WRITTEN PERMISSION OF BABCOCK-DAVIS IS PROHIBITED.

PROJECT:					
ARCHITECT:					
CONTRACTOR:					
babcockdavis 9300 73rd Avenue North Brooklyn Park, MN 55428				TITLE: STAINLESS STEEL CORNER GUARD, TYPE 304 OR 430, 16 GA, SURFACE MOUNT, ADHESIVE	
	NAME	DATE	SIZE	DWG. NO.	REV
DRAWN	DKL	9/30/12	A	BCG-SST-GENERAL-ADHESIVE	A
RELEASED	PGE	10/22/12	WEIGHT: VARIES		SHEET 1 OF 1